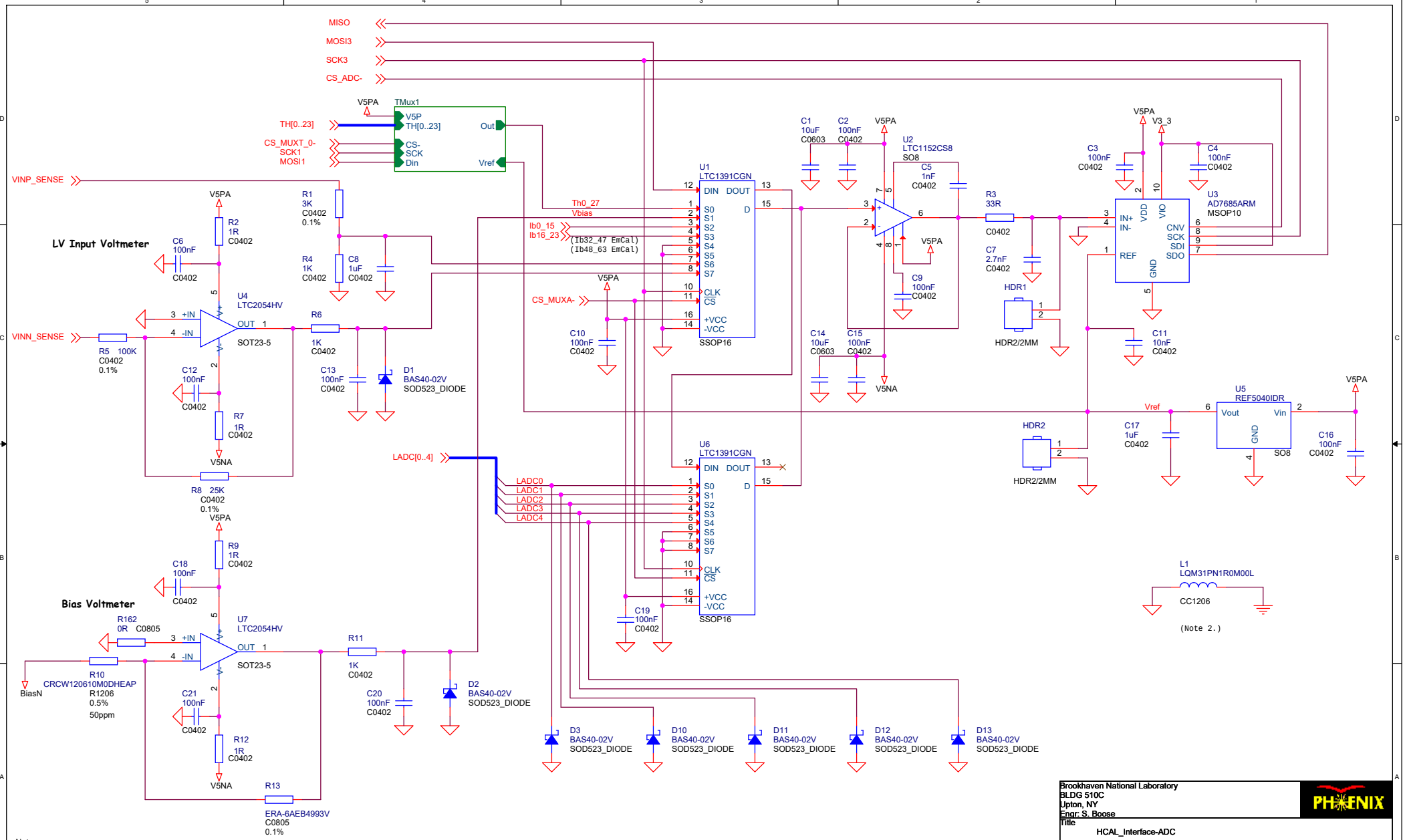

Notes:
1. Iq (Ad7685) = 1mA max. Iq (LTC1152) = 2.2mA max. Iq (REF5040) = 1mA max. Iq (LTC2054HV) 0.2mA max. Iq(LTC1391) = 20uA max. Iq (Tmux) = 0.2mA max. Total < 5mA max.
2. Junction between digital and analog ground is close to the ADC.

Brookhaven National Laboratory BLDG 510C Upton, NY Engr: S. Boose	PHENIX	
Title HCAL_Interface-ADC		
Size B	Document Number 205-1000-3000E.DSN	Rev E
Date: Friday, July 24, 2020	Sheet 1 of 21	