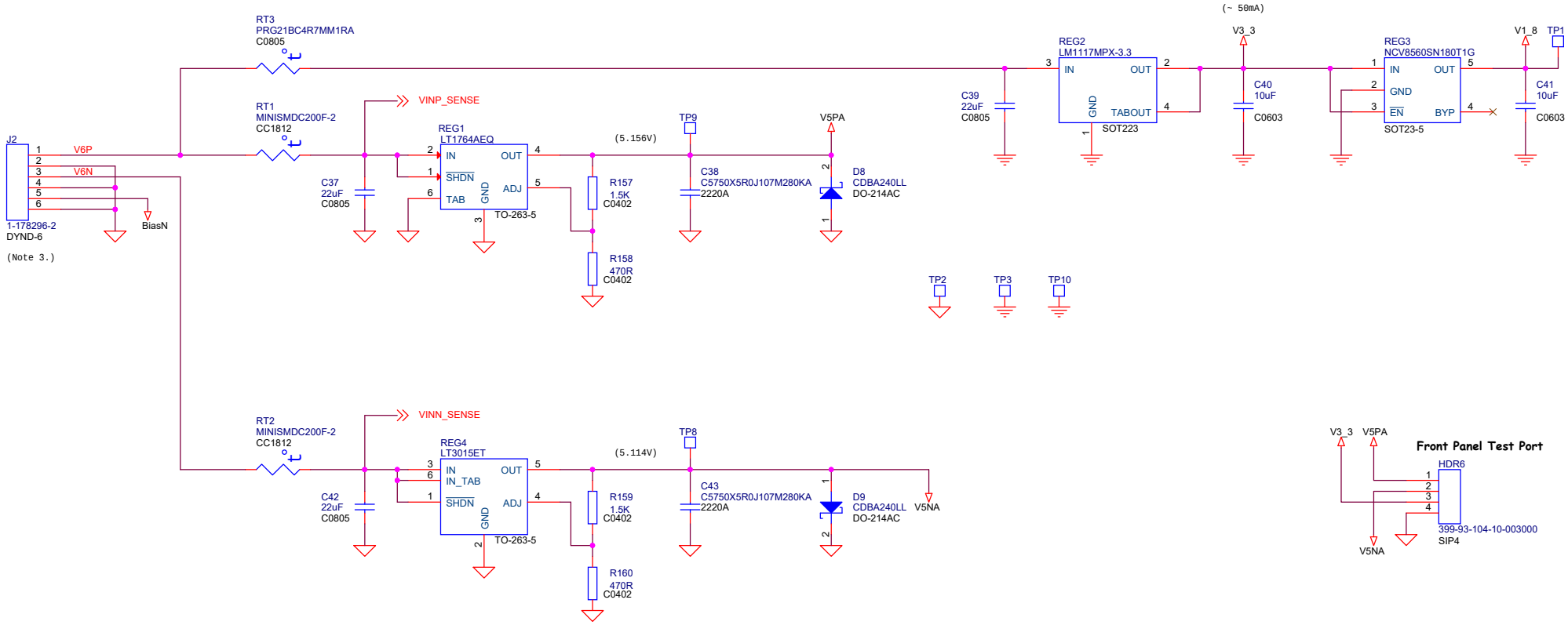

Notes:
1. Preamp current V5P and V5N are 32mA each X 24chans = +/- 0.77A.
2. Additional V5P current is 38mA, V5N is -6mA.
3. Mates with 1-178288-6 plug and 175218-2 pins. Use 6 cond AWG#18 with shield (General Cable C3065).

Brookhaven National Laboratory BLDG 510C Upton, NY Engr: S. Boose		PHENIX
Title: HCal Interface - Regulators		
Size: B	Document Number: 205-1000-3000C.DSN	Rev: C
Date: Friday, July 24, 2020	Sheet 6 of 21	