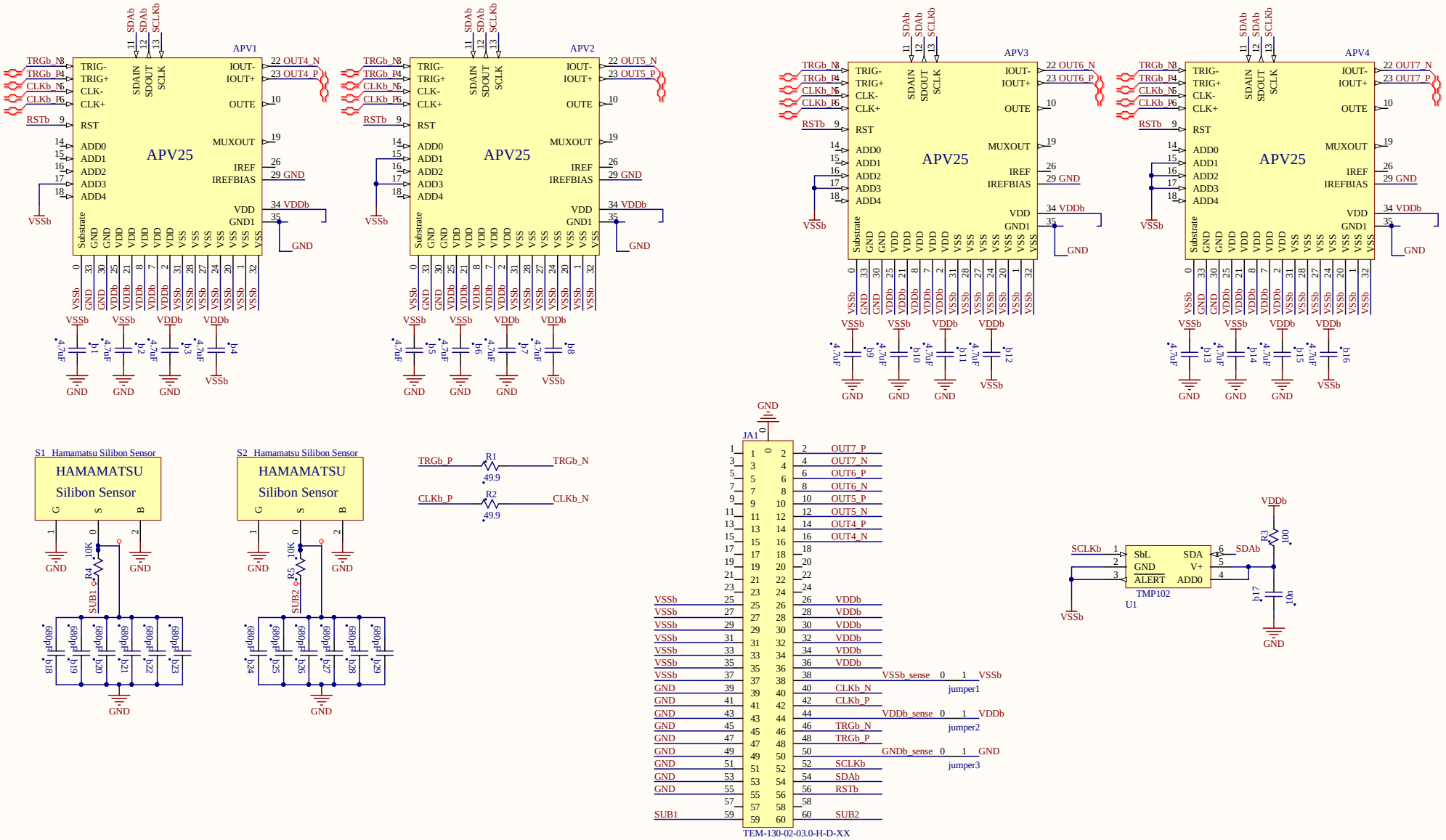
APV1
APV2
APV3
APV4
APV25
TRGb_N
TRGb_P
CLKb_N
CLKb_P
RSTb
SDAin
SDout
SCLK
SDAb
SCLKb
OUT4_N
OUT4_P
OUT5_N
OUT5_P
OUT6_N
OUT6_P
OUT7_N
OUT7_P
OUTE
MUXOUT
IREF
IREFBIAS
VDD
GND1
VDDb
GND
VSSb
S1 Hamamatsu Silibon Sensor
S2 Hamamatsu Silibon Sensor
HAMAMATSU
Silibon Sensor
R1
R2
49.9
JA1
TEM-130-02-03.0-H-D-XX
VSSb_sense
VDDb_sense
GNDb_sense
jumper1
jumper2
jumper3
TMP102
U1
SbL
ALERT
ADD0
SDA
V+
R3
100
10n