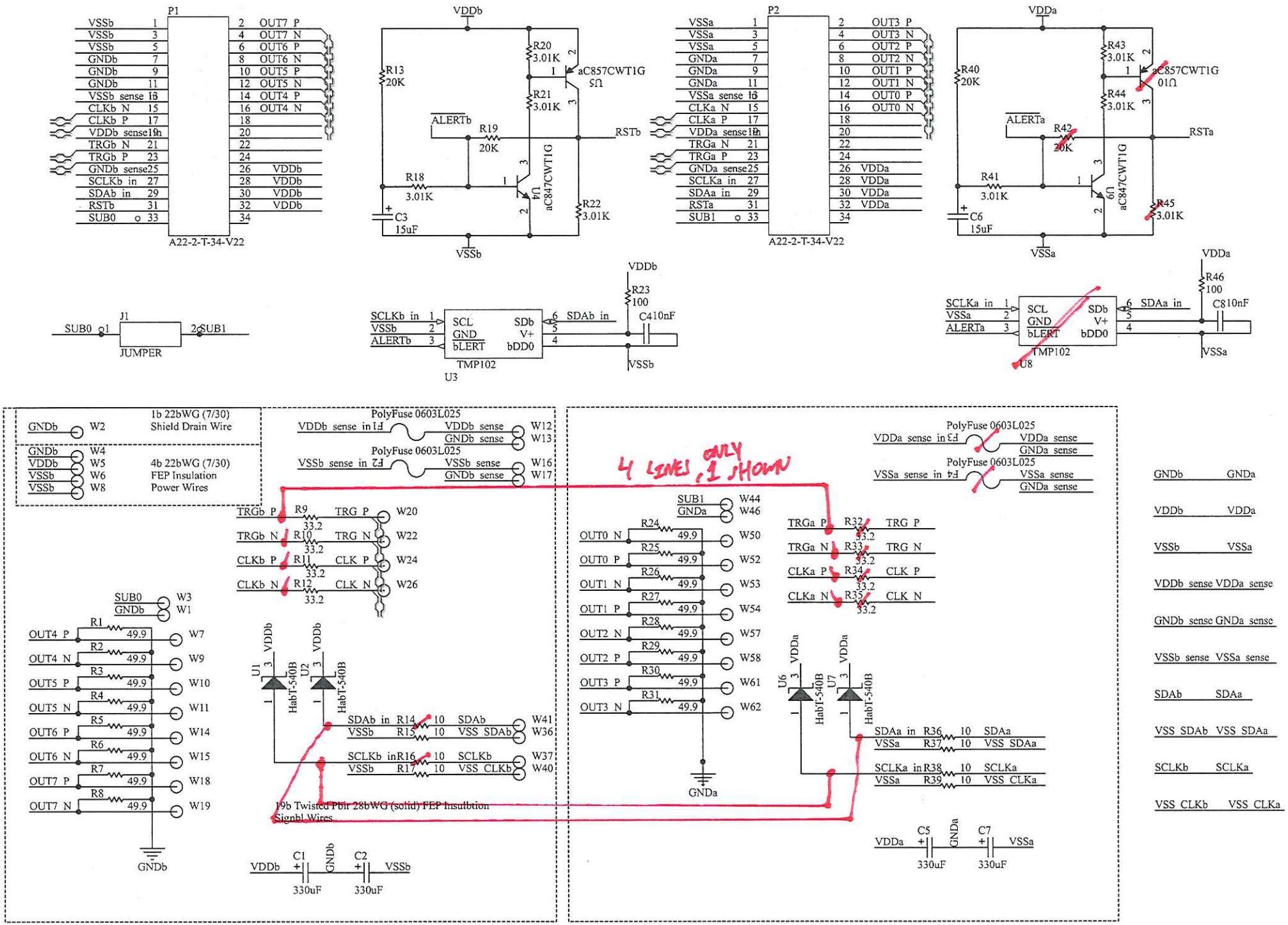
P1
A22-2-T-34-V22
VSSb 1
VSSb 3
VSSb 5
GNDb 7
GNDb 9
GNDb 11
VSSb sense 13
CLKb N 15
CLKb P 17
VDDb sense 19
TRGb N 21
TRGb P 23
GNDb sense 25
SCLKb in 27
SDAb in 29
RSTb 31
SUB0 33
2 OUT7 P
4 OUT7 N
6 OUT6 P
8 OUT6 N
10 OUT5 P
12 OUT5 N
14 OUT4 P
16 OUT4 N
18
20
22
24
26 VDDb
28 VDDb
30 VDDb
32 VDDb
34
VDDb
R13 20K
R20 3.01K
R21 3.01K
aC857CWT1G 5Ω
ALERTb
R19 20K
RSTb
R18 3.01K
aC847CWT1G 1Ω
R22 3.01K
C3 15uF
VSSb
P2
A22-2-T-34-V22
VSSa 1
VSSa 3
VSSa 5
GNDa 7
GNDa 9
GNDa 11
VSSa sense 13
CLKa N 15
CLKa P 17
VDDa sense 19
TRGa N 21
TRGa P 23
GNDa sense 25
SCLKa in 27
SDAa in 29
RSTa 31
SUB1 33
2 OUT3 P
4 OUT3 N
6 OUT2 P
8 OUT2 N
10 OUT1 P
12 OUT1 N
14 OUT0 P
16 OUT0 N
18
20
22
24
26 VDDa
28 VDDa
30 VDDa
32 VDDa
34
VDDa
R40 20K
R43 3.01K
aC857CWT1G 01Ω
R44 3.01K
ALERTa
R42 20K
RSTa
R41 3.01K
aC847CWT1G 6Ω
R45 3.01K
C6 15uF
VSSa
J1
SUB0 1
2 SUB1
JUMPER
VDDb
R23 100
SCLKb in 1
VSSb 2
ALERTb 3
SCL
GND
bLERT
SDb
V+
bDD0
6 SDAb in
5
4
C410nF
TMP102
U3
VSSb
VDDa
R46 100
SCLKa in 1
VSSa 2
ALERTa 3
SCL
GND
bLERT
SDb
V+
bDD0
6 SDAa in
5
4
C810nF
TMP102
U8
VSSa
GNDb W2
1b 22bWG (7/30)
Shield Drain Wire
GNDb W4
VDDb W5
VSSb W6
VSSb W8
4b 22bWG (7/30)
FEP Insulation
Power Wires
PolyFuse 0603L025
VDDb sense in F1
VDDb sense W12
GNDb sense W13
PolyFuse 0603L025
VSSb sense in F2
VSSb sense W16
GNDb sense W17
4 LINES, ONLY 1 SHOWN
PolyFuse 0603L025
VDDa sense in F3
VDDa sense
GNDa sense
PolyFuse 0603L025
VSSa sense in F4
VSSa sense
GNDa sense
TRGb P R9 33.2 TRG P W20
TRGb N R10 33.2 TRG N W22
CLKb P R11 33.2 CLK P W24
CLKb N R12 33.2 CLK N W26
SUB0 W3
GNDb W1
OUT4 P R1 49.9 W7
OUT4 N R2 49.9 W9
OUT5 P R3 49.9 W10
OUT5 N R4 49.9 W11
OUT6 P R5 49.9 W14
OUT6 N R6 49.9 W15
OUT7 P R7 49.9 W18
OUT7 N R8 49.9 W19
GNDb
U1 VDDb HabT-540B
U2 VDDb HabT-540B
SDAb in R14 10 SDAb W41
VSSb R15 10 VSS SDAb W36
SCLKb in R16 10 SCLKb W37
VSSb R17 10 VSS CLKb W40
19b Twisted Pair 28bWG (solid) FEP Insulation
Signal Wires
VDDb C1 330uF GNDb C2 330uF VSSb
SUB1 W44
GNDa W46
OUT0 N R24 49.9 W50
OUT0 P R25 49.9 W52
OUT1 N R26 49.9 W53
OUT1 P R27 49.9 W54
OUT2 N R28 49.9 W57
OUT2 P R29 49.9 W58
OUT3 P R30 49.9 W61
OUT3 N R31 49.9 W62
GNDa
TRGa P R32 33.2 TRG P
TRGa N R33 33.2 TRG N
CLKa P R34 33.2 CLK P
CLKa N R35 33.2 CLK N
U6 VDDa HabT-540B
U7 VDDa HabT-540B
SDAa in R36 10 SDAa
VSSa R37 10 VSS SDAa
SCLKa in R38 10 SCLKa
VSSa R39 10 VSS CLKa
VDDa C5 330uF GNDa C7 330uF VSSa
GNDb GNDa
VDDb VDDa
VSSb VSSa
VDDb sense VDDa sense
GNDb sense GNDa sense
VSSb sense VSSa sense
SDAb SDAa
VSS SDAb VSS SDAa
SCLKb SCLKa
VSS CLKb VSS CLKa